BORA

PLANNING DOCUMENT
X Pure Max

BORA More than cooking.



BORA X Pure Max

The cooktop extractor system with 5 cooking zones and optional control knobs.

Product highlights



Matt or high-gloss glass ceramic

The BORA X Pure Max boasts an impressive flush-mounted design and is available with either high-gloss or matt glass ceramic. The matt glass gives the cooktop extractor system an elegant finish and makes signs of use less visible.

Intuitive operation with BORA xControl

The BORA X Pure Max's xControl operating concept combines a high-resolution touchscreen with optional control knobs. The 5-inch touchscreen impresses with its high-resolution display, optimum readability from any viewing angle and precise touch sensitivity. When using Assist-compatible cookware, the Assist functions Fry, Boil, Melt, Keep warm, Simmer, Pasta, Steam and Coffee can be used directly on the cooktop.

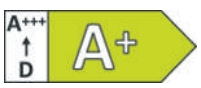

5 full-size cooking zones

Thanks to the intelligent product design with a round air inlet nozzle, the BORA X Pure Max offers a decisive space advantage. The additional cooking zone above the air inlet nozzle provides maximum flexibility and added value when cooking.

Optional control knobs

The optional control knobs also allow intuitive and tactile temperature adjustment. The minimalist, ring-shaped aluminium design blends harmoniously into the kitchen architecture. The dynamic white and red lighting indicates which cooking zones are currently active. The materials used and their high-quality feel ensure an exceptional operating experience.



High-gloss glass ceramic:

PUXAM
X Pure Max surface induction cooktop with integrated cooktop extractor – exhaust air

PUXUM
X Pure Max surface induction cooktop with integrated cooktop extractor – recirculation



Matt glass ceramic:

PUXAMR
X Pure Max Rough surface induction cooktop with integrated cooktop extractor – exhaust air

PUXUMR
X Pure Max Rough surface induction cooktop with integrated cooktop extractor – recirculation



PUEDM
Pure Max air inlet nozzle



PUBKM5
Pure illuminated control knobs, set (5 pieces)



GFESP
eSwap odour filter Plus



GFES
eSwap odour filter



KWGPFI
Grill pan for surface induction



KWPAP7
3-piece pot set



KWPAP8
Ø24 cm frying pan

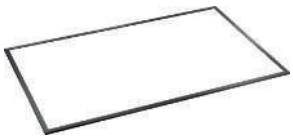

KFR830AB
Cooktop frame for a width of 830 mm



USL515
Side frame for a cooktop depth of 515 mm

USL515AB
Side frame for a cooktop depth of 515 mm, All Black

Parameter	Value
Multiphase supply voltage	380 – 415 V 2N /3N
Single-phase supply voltage	220 – 240 V
Frequency	50 – 60 Hz
Maximum power consumption	7360 W (4400 W /3600 W)
Three-phase power supply/fuse protection	3 x 16 A
Two-phase power supply/fuse protection	2 x 16 A
Single-phase power supply/fuse protection	1 x 32 A (1 x 20 A / 1 x 16 A)
Dimensions (width x depth x height)	830 × 515 × 199 mm
Weight (incl. accessories/packaging)	23.55 kg
Cooktop	
Surface material	Glass ceramic
Cooktop power levels	1 – 9, P (incl. half steps)
Cooking zones left and right, size (front and back respectively)	230 x 230 mm
Cooking zones left and right, power (front and back respectively)	2100 W
Cooking zones left and right, power settings (front and back respectively)	3000 W
Rear centre cooking zone size	Ø140 mm
Rear centre cooking zone output	900 W
Rear centre cooking zone power setting output	1350 W
Exhaust air system	
Cooktop extractor power levels	1 – 9, P
Exhaust air connection	BORA Ecotube

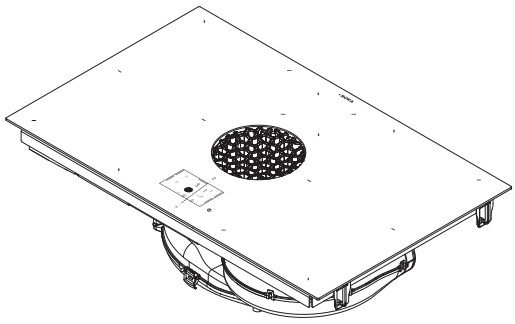

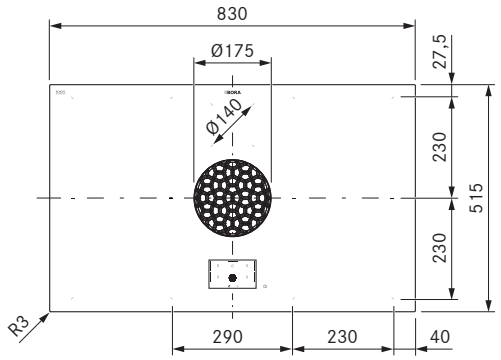

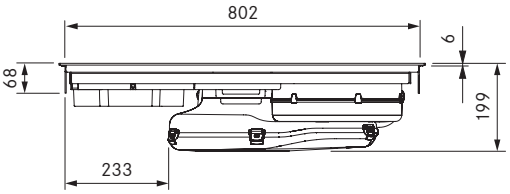

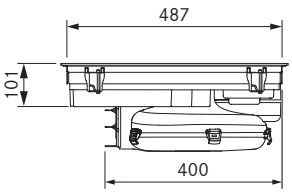

Product description
- Suitable for kitchen units with a min. width of 90 cm
- 4 oversized surface induction cooking zones (230 x 230 mm) + 1 centrally positioned rear cooking zone (Ø140 mm)
- xControl operation: intuitive touchscreen, optionally with control knobs
- BORA Assist
- Stainless steel grease filter and integrated filter tray

Functions
- BORA Assist functions Fry, Boil, Melt, Keep warm, Simmer, Pasta, Steam, Coffee
- Power setting
- Automatic extractor function
- Automatic after-run
- Pan size recognition
- Bridging function
- Cooking zone timer
- Pause function
- Short-time timer

Safety features
Child lock, cleaning lock, residual heat indicator, safety shut-down, overheating protection

Scope of delivery
Surface induction cooktop with integrated cooktop extractor – exhaust air PUXAM/PUXAMR, air inlet nozzle PUEDM, stainless steel grease filter, operating and installation instructions, installation accessories

Accessories
Pure illuminated control knobs (5 pieces) PUBKM5, stainless steel grease filter PUEF, air inlet nozzles PUEDM, PUXED2, PUED2, sealing tape UDB25, cooktop frame KFR830AB, side frames USL515/ USL515AB, grill pan for surface induction KWGPFI, 3-piece set: pots and steamer KWPAP7, Ø24 cm frying pan KWPAP8

Product and planning information
- The mains supply cable is to be provided on site.
- Power supply socket at the front.
- Flush installation or surface mounting possible.
- Sufficient ventilation below the cooktop must be ensured.
- The drawers or shelves in the base unit must be removable (for maintenance and cleaning).
- Can be combined with the BORA Pure illuminated control knobs (see planning information for Pure illuminated control knobs).
- Can be combined with all BORA sockets.
- Not compatible with BORA universal fans.
- When all installation work is complete, the appliance is to be sealed all round using heat-resistant silicone sealant.

Technical data	
Multiphase supply voltage	380 – 415 V 2N /3N
Single-phase supply voltage	220 – 240 V
Frequency	50 – 60 Hz
Maximum power consumption	7360 W (4400 W /3600 W)
Three-phase power supply/fuse protection	3 x 16 A
Two-phase power supply/fuse protection	2 x 16 A
Single-phase power supply/fuse protection	1 x 32 A (1 x 20 A / 1 x 16 A)
Dimensions (width x depth x height)	830 × 515 × 199 mm
Weight (incl. accessories/packaging)	25.42 kg
Weight (net)	19.71 kg
Surface material	Glass ceramic
Cooktop power levels	1 – 9, P (incl. half steps)
Cooking zones left and right, size (front and back respectively)	230 x 230 mm
Cooking zones left and right, power (front and back respectively)	2100 W
Cooking zones left and right, power settings (front and back respectively)	3000 W
Rear centre cooking zone size	Ø140 mm
Rear centre cooking zone output	900 W
Rear centre cooking zone power setting output	1350 W
Cooktop extractor power levels	1 – 9, P
Size of exhaust opening (WxH)	445 x 137 mm
Odour filter service life	150 h (1 year)

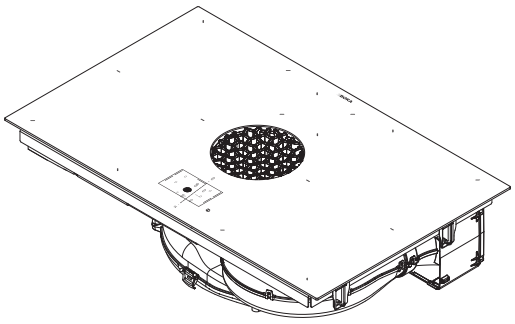

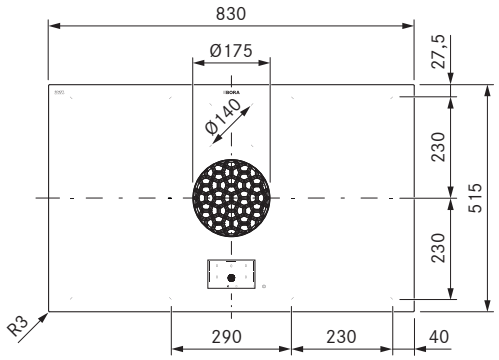

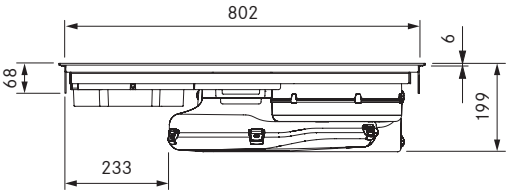

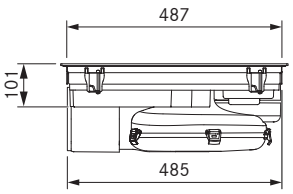

Product description
- Suitable for kitchen units with a min. width of 90 cm
- 4 oversized surface induction cooking zones (230 x 230 mm) + 1 centrally positioned rear cooking zone (Ø140 mm)
- xControl operation: intuitive touchscreen, optionally with control knobs
- BORA Assist
- Stainless steel grease filter and integrated filter tray
- eSwap+ odour filter, effective and with easy filter change from above

Functions
- BORA Assist functions Fry, Boil, Melt, Keep warm, Simmer, Pasta, Steam, Coffee
- Power setting
- Automatic extractor function
- Automatic after-run
- Pan size recognition
- Bridging function
- Cooking zone timer
- Pause function
- Short-time timer
- Filter status and filter service display

Safety features
Child lock, cleaning lock, residual heat indicator, safety shut-down, overheating protection

Scope of delivery
Surface induction cooktop with integrated cooktop extractor – recirculation PUXUM/PUXUMR, air inlet nozzle PUEDM, stainless steel grease filter, odour filter GFESP, operating and installation instructions, installation accessories

Accessories
Pure illuminated control knobs (5 pieces) PUBKM5, odour filters GFES/GFESP, stainless steel grease filter PUEF, air inlet nozzles PUEDM, PUXED2, PUED2, sealing tape UDB25, cooktop frame KFR830AB, side frames USL515/USL515AB, grill pan for surface induction KWGPFI, 3-piece set: pots and steamer KWPAP7, Ø24 cm frying pan KWPAP8

Product and planning information
- The mains supply cable is to be provided on site.
- Power supply socket at the front.
- Flush installation or surface mounting possible.
- Sufficient ventilation below the cooktop must be ensured.
- The drawers or shelves in the base unit must be removable (for maintenance and cleaning).
- Can be combined with the BORA Pure illuminated control knobs (see planning information for Pure illuminated control knobs).
- Can be combined with all BORA sockets.
- Not compatible with BORA universal fans.
- When all installation work is complete, the appliance is to be sealed all round using heat-resistant silicone sealant.

Technical data

Knob ring dimensions	Ø67 mm, depth 20 mm
Overall dimensions	Ø82 mm, depth 60 mm
Suitable front panel thickness	5 – 20 mm
Control range	Power levels of the cooking zones
Power control	Turning the knob ring (continuously variable)
Lighting colours	White = not active Red = active Dimly lit red = residual heat

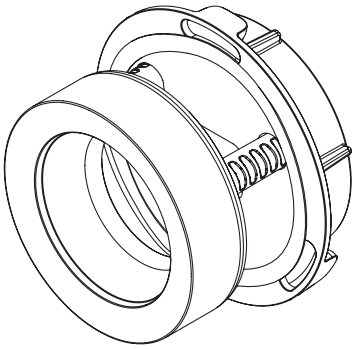

Product description

- Intuitive and simple knob control for all cooking zones
- When a cooking zone is in use, the corresponding control knob lights up red.
- Power- and context-related lighting (active = red, not active = white, residual heat = dimly lit red)

Scope of delivery

5x Pure illuminated control knobs, 5x wave springs, 5x fastening nuts, 5x guide plates, 5x connection cables 0.5 m, drilling template

Product and planning information

- For installation instructions, see the X Pure Max operating and installation instructions.
- With a front panel height of 100 mm or more, a distance of at least 50 mm between the front panel and the worktop cut-out and at least 70 mm between the top edge of the worktop and the centre of the control knob, the knobs can easily be centred vertically in the front panel
- A minimum distance of 50 mm must be maintained between the centre of the control knob and the bottom edge of the worktop.
- The panel bore holes must never be drilled directly in the kitchen unit when the cooktop is already installed, as this may damage the appliance.
- Installation in front panels with a thickness of >20 mm is possible if the back is milled out.

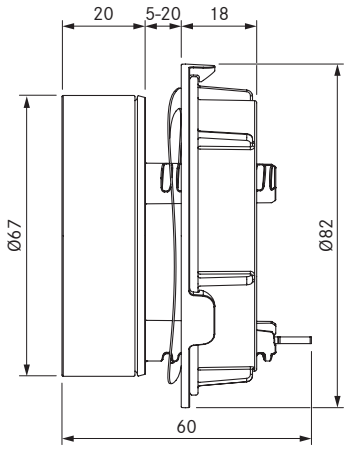

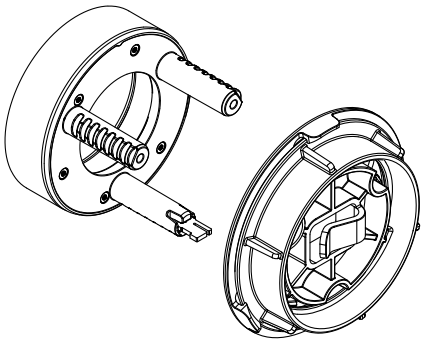

Product data sheet

BORA X Pure Max

Manufacturer		**BORA**	
Model identification		**PUXAM | PUXAMR**	
	Icon	Value	Unit
Energy consumption			
Annual energy consumption	AEC_{hood}	33.6	kWh/a
Energy efficiency class	–	A+	–
Energy efficiency index	EEI_{hood}	42.8	–
Flow volume			
Fluid dynamic efficiency	FDE_{hood}	32.5	–
Fluid dynamic efficiency class	–	A	–
Airflow at minimum speed in normal operation	–	160	m^3/h
Airflow at maximum speed in normal operation	–	531	m^3/h
Airflow when operated on the intensive level or fast mode level (power setting)	–	590	m^3/h
Maximum airflow	Q_{max}	605.5	m^3/h
Measured air flow rate at the best efficiency point	Q_{BEP}	303.8	m^3/h
Measured air pressure at the best efficiency point	P_{BEP}	442	Pa
Measured electric power input at the best efficiency point	W_{BEP}	114.9	W
Time increase factor	f	0.8	
Lighting			
Lighting efficiency	LE_{hood}	*	lx/W
Lighting efficiency class	–	*	–
Nominal power of the lighting system	W_L	*	W
Average illumination of the lighting system on the cooking surface	E_{middle}	*	lx
Grease filtering			
Grease filtering efficiency	GFE_{hood}	98.0	%
Grease filtering efficiency class	–	A	–
Airborne acoustical noise emission			
Sound power level at minimum available speed in normal operation	L_{WA}	39	dB re 1 pW
Sound power level at maximum available speed in normal operation	L_{WA}	66	dB re 1 pW
Sound power level when operated on the intensive level or fast mode level (power setting)	L_{WA}	68	dB re 1 pW
Sound pressure level at minimum available speed in normal operation**	L_{pA}	27	dB re 20 µPa
Sound pressure level at maximum available speed in normal operation**	L_{pA}	54	dB re 20 µPa
Sound pressure level when operated on the intensive level or fast mode level (power setting)**	L_{pA}	56	dB re 20 µPa
Power consumption			
Power consumption in off mode	P_o	*	W
Power consumption in standby mode	P_S	0.21	W

Product information according to Commission Delegated Regulation (EU) No. 65/2014 and Regulation (EU) No. 66/2014.

* Does not apply to this product.

** Voluntary declaration.

Minimum installation dimensions

BORA X Pure Max

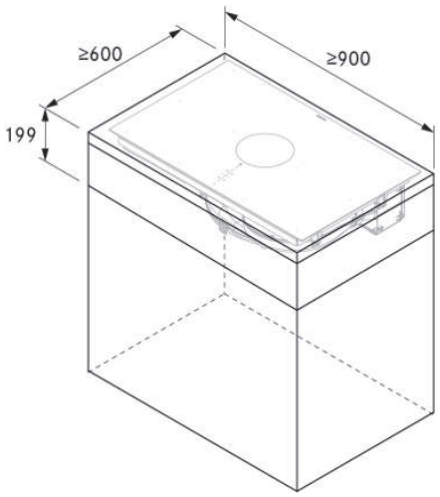

Cut-out dimensions

BORA X Pure Max

Flush installation

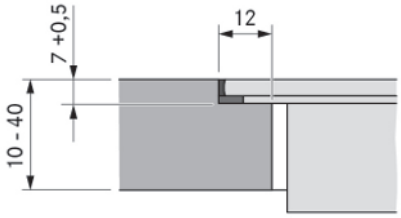

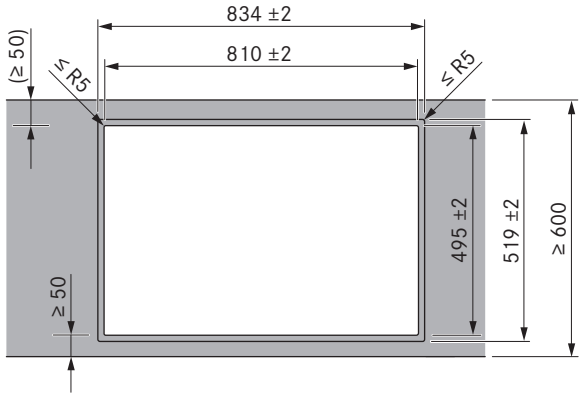

Surface mounting (with or without cooktop frame)

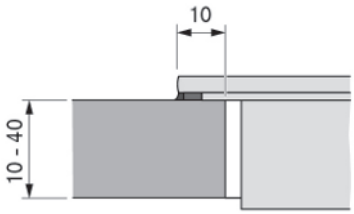

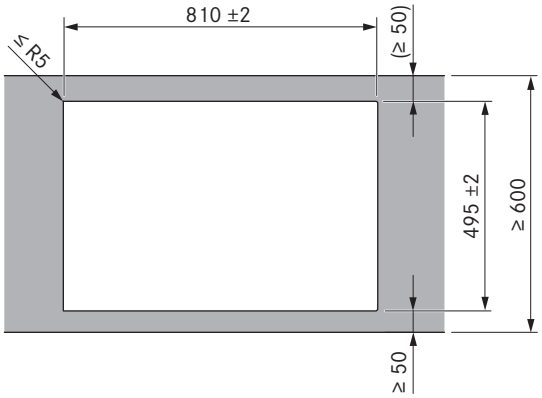

Important planning information:

- The minimum measurement of 50 mm from the front edge of the worktop to the worktop cut-out is a recommendation from BORA.
- When using the PUBKM5 control knobs, a minimum distance of 50 mm from the front edge of the unit front must be maintained.
- Cut-out dimension tolerance +/-2 mm.
- Clearance of 2 mm should be provided around the built-in appliances.
- Please note the worktop manufacturer's instructions on the suitability of the worktop. Worktop cut-outs must be moisture-sealed using suitable means or, where necessary, fitted with a thermal insulator (e.g. in the case of Corian or HiMacs worktops).
- When installation is complete, the appliance is to be sealed in using heat-resistant silicone sealant.

Exhaust air appliance
(row 600)

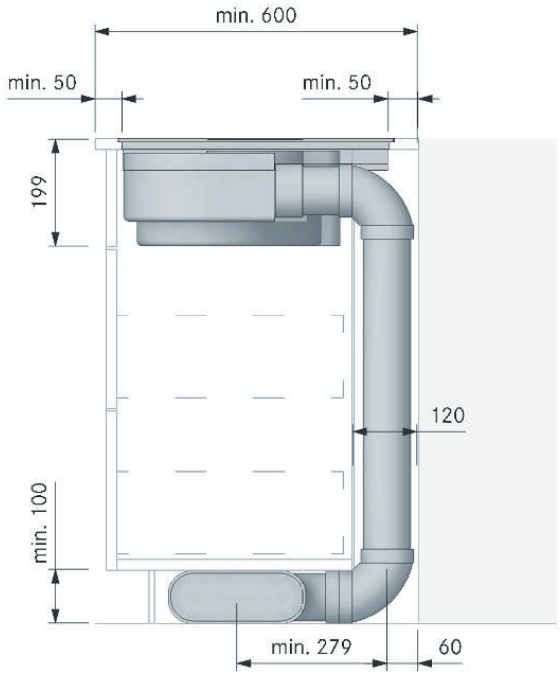

Exhaust air appliance
(island)

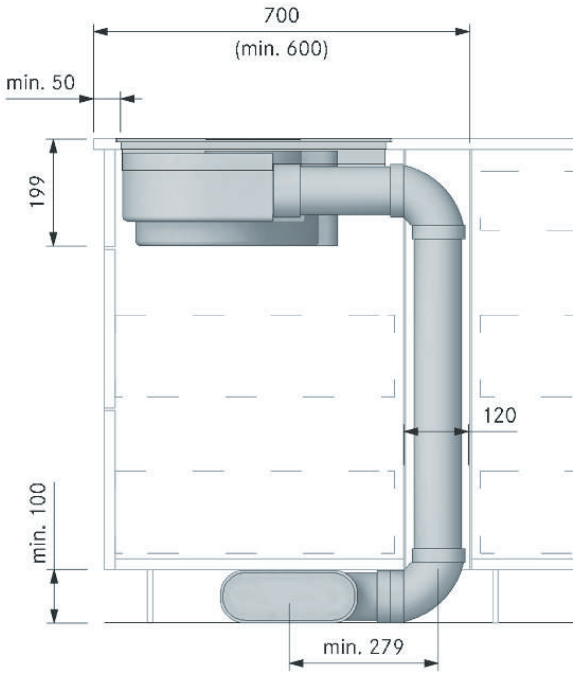

Recirculation appliance
(row 600)

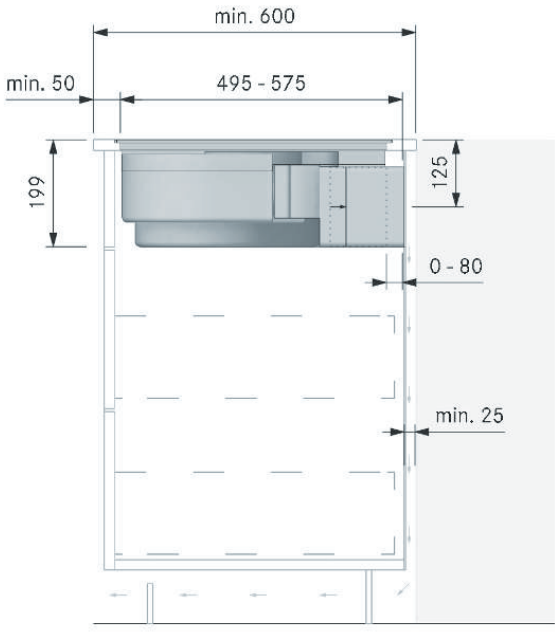

Recirculation appliance
with additional telescopic pull-out PULBTA (island)

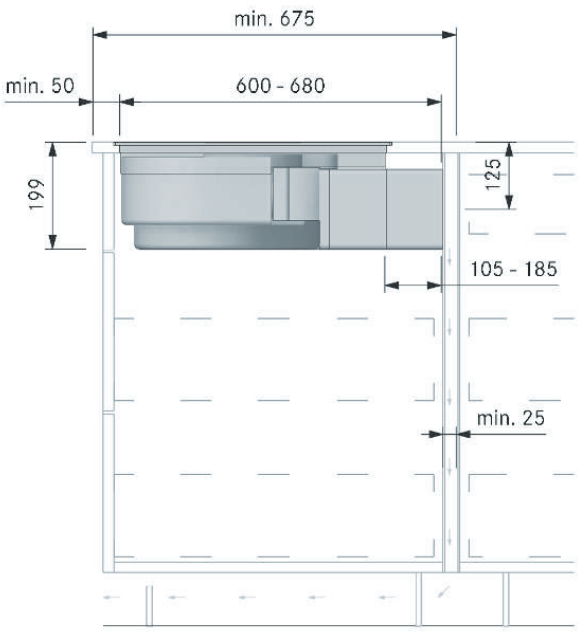

Important planning information for recirculation ducting:
- To ensure optimal extraction performance, a return flow aperture of at least 500 cm^2 for air recirculation must be guaranteed.
- When using the PUBKM5 control knobs, a minimum distance of 50 mm from the front edge of the unit front must be maintained.

Exhaust air appliance with shallow duct EFS750
(row; depth 600)

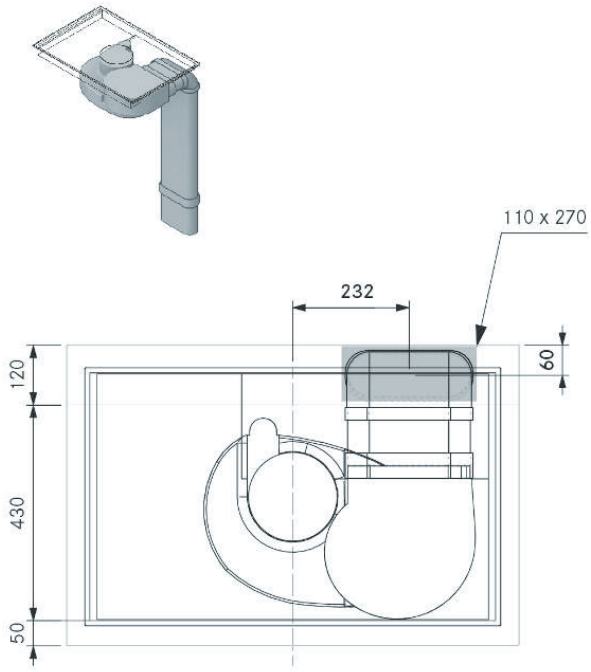

Exhaust air appliance with shallow duct EFS750
(island; depth 700)

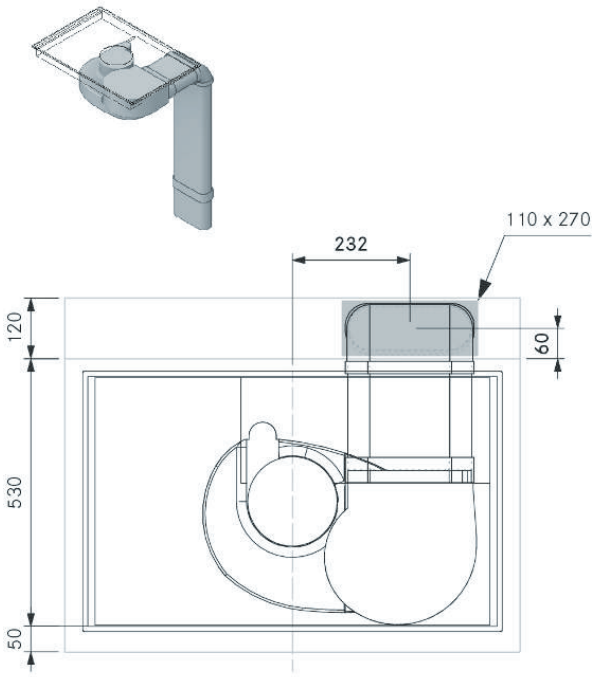

Exhaust air appliance with shallow duct EFS750, straight transition piece EFRG (row)

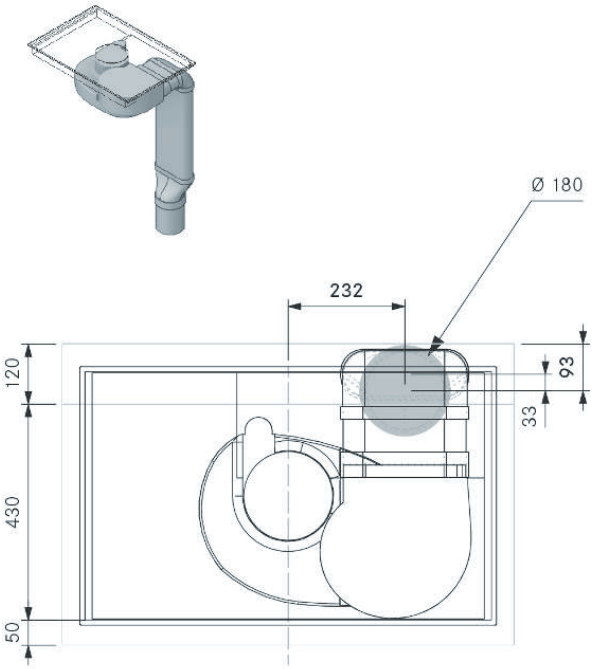

Recirculation appliance with shallow duct EFS750, straight transition piece EFRG (island)

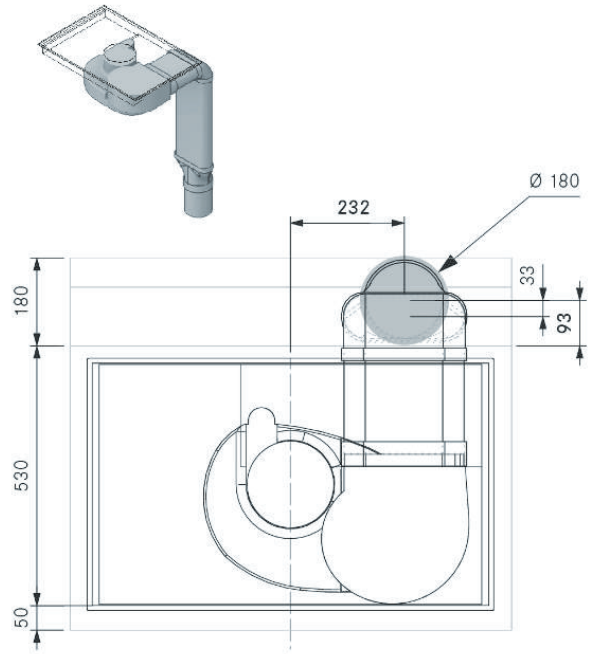

Duct connection dimensions

BORA X Pure Max

Duct connection dimensions, exhaust air appliances

with BORA Ecotube duct connection

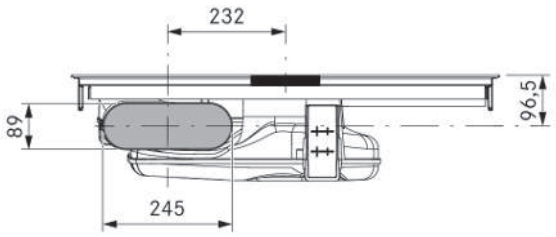

Duct connection dimensions, recirculation appliances

for return flow aperture on the back of the kitchen unit

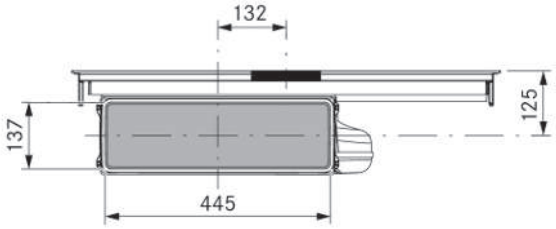

Back panel cut-out, recirculation appliances

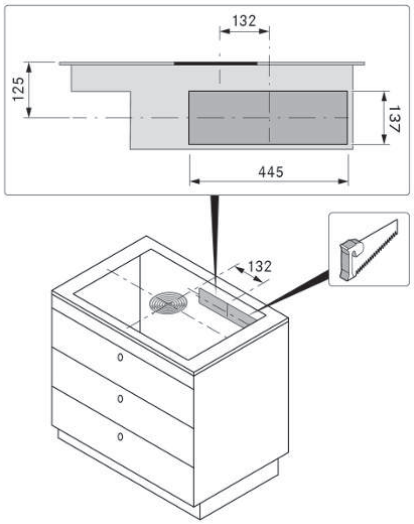

Connection diagram

BORA X Pure Max

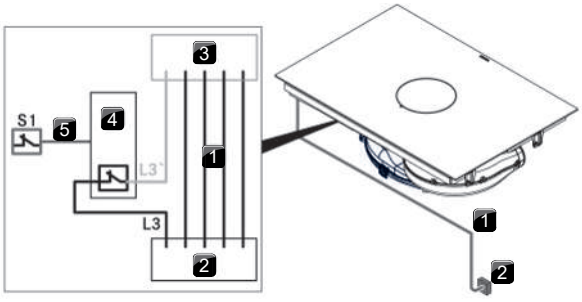

[1] Appliance power supply cable (to be provided on site)
[2] Power supply L1/L2/L3/N/PE (min. fuse protection 3 x 16 A)
[3] Appliance power supply (cooktop with cooktop extractor)
[4] Switch relay
[5] Switch connection S1 and switch relay (e.g. radio link)
[S1] External switch contact (e.g. window contact switch when operating the exhaust air version with firing systems)

The connection diagram shows the maximum connection options required and is for planning purposes only.
Connection itself must be carried out by trained personnel based on the operating instructions.

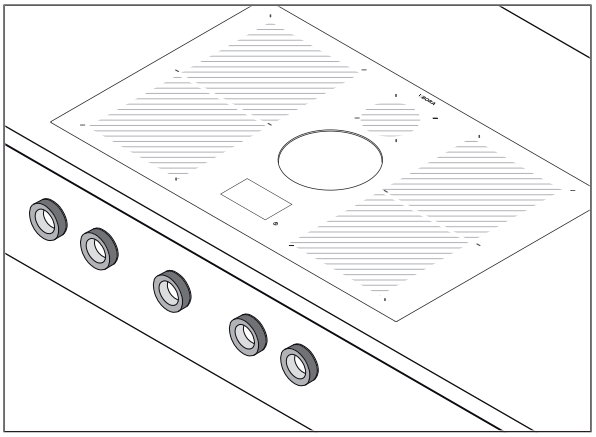

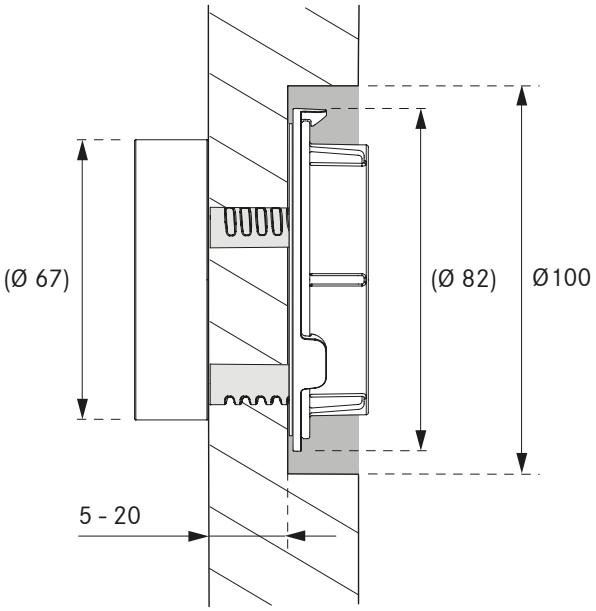

Assembly instructions

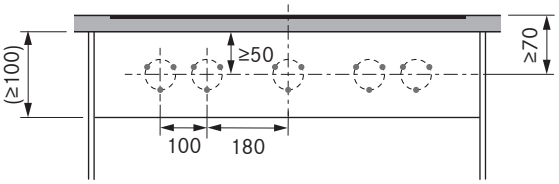

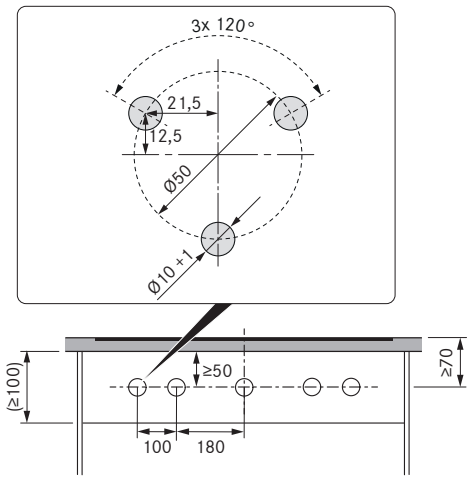

Flush installation

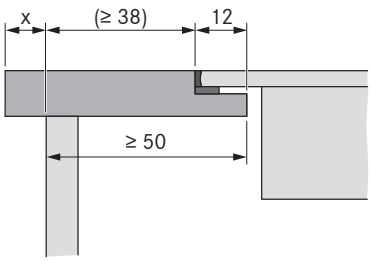

Surface mounting (with or without cooktop frame)

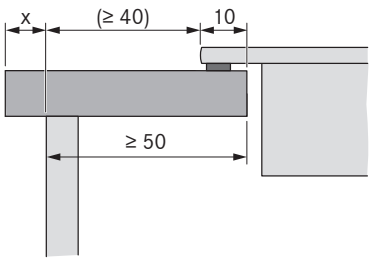

Installation may only be carried out in accordance with the applicable standards, regulations and laws. See more model plans at **partner.bora.com**

Exhaust air version

PA10115 fitted under the worktop to the rear with EFAF and UEBF

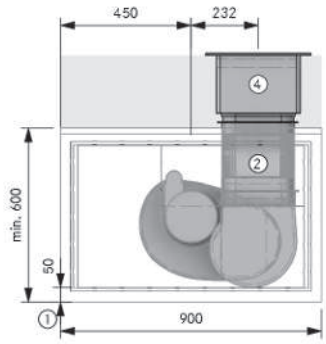

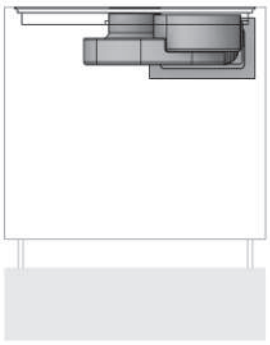

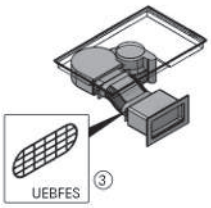

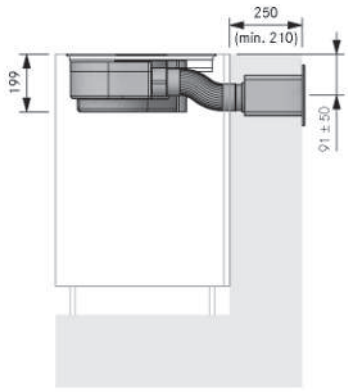

Planning information

① At least 50 mm to the start of the cut-out. This is a recommended measurement. Please contact your worktop manufacturer for the definitive dimension.
② Maximum EFAF offset: height 50 mm, side 30 mm.
③ In the case of ducting ≤ 900 mm with no bend between the fan and wall sleeve, UEBFES/UEBRES is required.
④ Wall opening 310 x 155 mm. Must expel air in a straight line regardless of the weather conditions.

BORA products

- 1x PUXA2/PUXA2R/PUXAM/PUXAMR cooktop with integrated cooktop extractor – exhaust air

BORA Ecotube products

- 1x EFV/1 shallow duct connection
- 1x UEBF/1 3box wall sleeve
- 1x UEBFES/1 3box wall sleeve safety guard
- 1x EFS750/1 shallow duct with partition 750 mm
- 1x EFAF flexible shallow adapter

Sealing material is included in the scope of delivery in the case of moulded parts with a socket design.

Exhaust air version

PA10120 worktop at the rear with UEBR

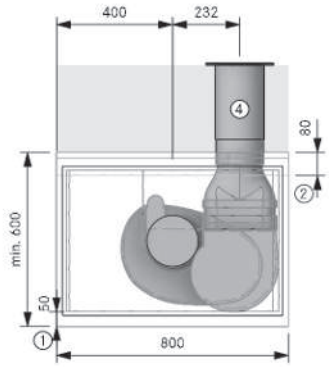

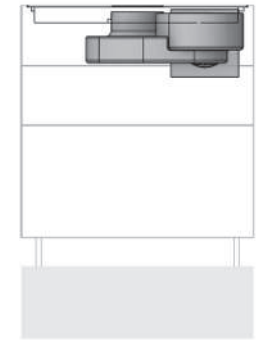

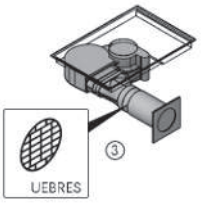

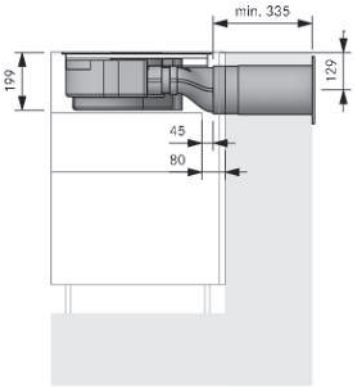

Planning information

① At least 50 mm to the start of the cut-out. This is a recommended measurement. For the binding measurement, please contact your worktop manufacturer.
② Space required for technical equipment
③ In the case of ducting ≤ 900 mm with no bend between the fan and wall sleeve, UEBFES/UEBRES is required
④ Core bore hole at least Ø180 mm. Must expel air in a straight line regardless of the weather conditions.

BORA products

- 1x PUXA2/PUXA2R/PUXAM/PUXAMR Pure induction cooktop with integrated cooktop extractor – exhaust air

BORA Ecotube products

- 1x EFV/1 shallow duct connection
- 1x EFRG/1 shallow-to-round straight transition piece
- 1x UEBR/1 round 3box wall sleeve
- 1x UEBRES/1 3box wall sleeve safety guard
- 1x ER750/1 round duct 750 mm
- 1x EFS750/1 shallow duct with partition 750 mm

Sealing material is included in the scope of delivery in the case of moulded parts with a socket design.

Installation may only be carried out in accordance with the applicable standards, regulations and laws. See more model plans at **partner.bora.com**

Exhaust air version

PA10140 worktop at the rear with swan neck and UEBR

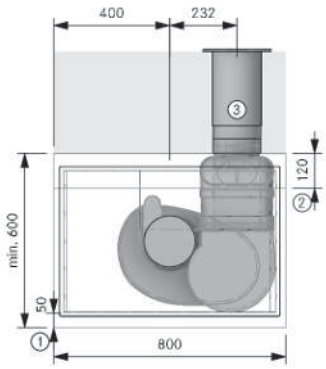

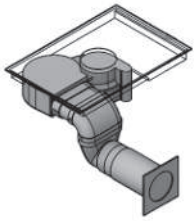

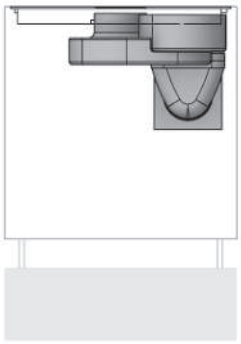

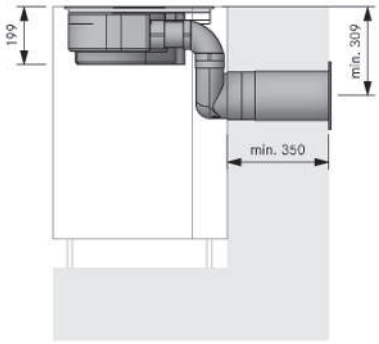

Planning information

① At least 50 mm to the start of the cut-out. This measurement is a recommendation. Please contact your worktop manufacturer for the definitive dimension.
② Space required for technical equipment
③ Core bore hole at least Ø180 mm. Must expel air in a straight line regardless of the weather conditions

BORA products

- 1x PUXA2/PUXA2R/PUXAM/ PUXAMR surface induction/ induction cooktop with integrated cooktop extractor – exhaust air

BORA Ecotube products

- 1x EFV/1 shallow duct connection
- 1x EFBV90/1 shallow vertical 90° bend
- 1x UEBR/1 round 3box wall sleeve
- 1x EFS750/1 shallow duct with partition 750 mm
- 1x ERV/1 round duct connection
- 1x EFR90/1 shallow-to-round 90° transition piece
- 1x ER750/1 round duct 750 mm

Sealing material is included in the scope of delivery in the case of moulded parts with a socket design.

Exhaust air version

PA10424 worktop to the left with vertical UEBR

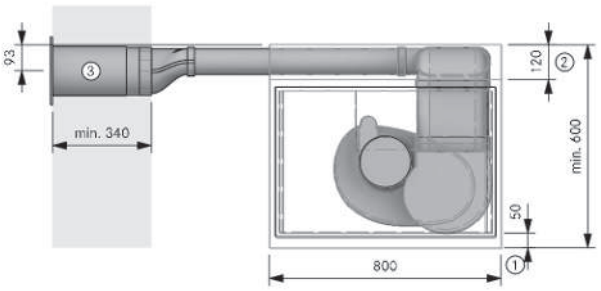

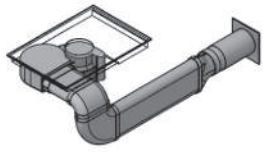

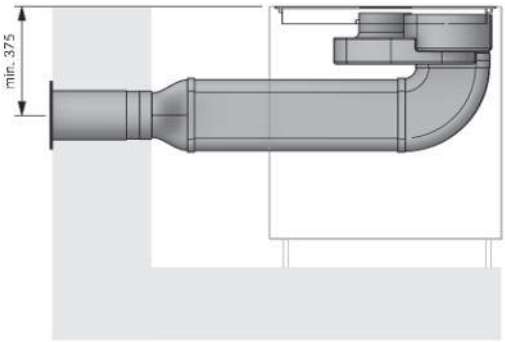

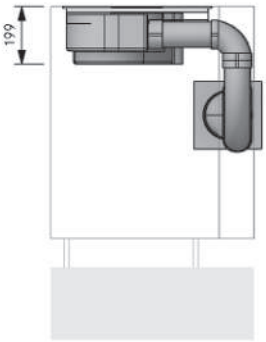

Planning information

① At least 50 mm to the start of the cut-out. This is a recommended measurement. Please contact your worktop manufacturer for the definitive dimension.
② Space required for technical equipment
③ Core bore hole at least Ø180 mm. Must expel air in a straight line regardless of the weather conditions

BORA products

- 1x PUXA2/PUXA2R/PUXAM/ PUXAMR surface induction/ induction cooktop with integrated cooktop extractor – exhaust air

BORA Ecotube products

- 1x EFBH90/1 shallow horizontal 90° bend
- 1x EFBV90/1 shallow vertical 90° bend
- 1x EFRG/1 shallow-to-round straight transition piece
- 1x EFV/1 shallow duct connection
- 1x UEBR/1 round 3box wall sleeve
- 2x EFS750/1 shallow duct with partition 750 mm
- 1x ER750/1 round duct 750 mm

Sealing material is included in the scope of delivery in the case of moulded parts with a socket design.

Installation may only be carried out in accordance with the applicable standards, regulations and laws. See more model plans at **partner.bora.com**

Exhaust air version

PA20240 fitted in the plinth to the right with swan neck and UEBR

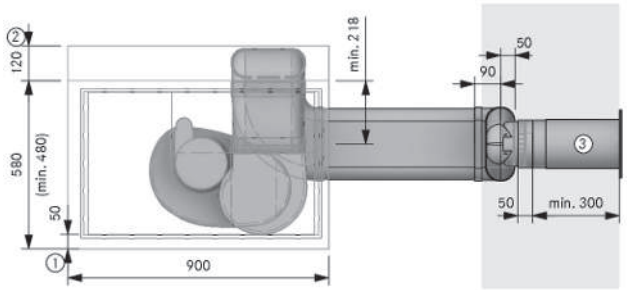

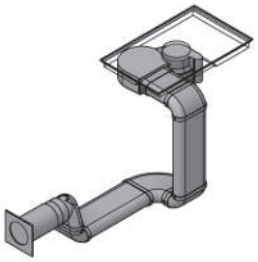

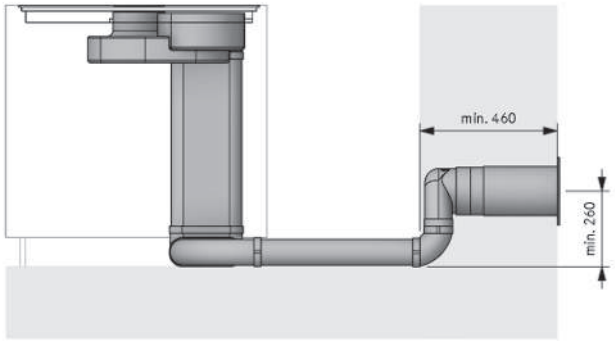

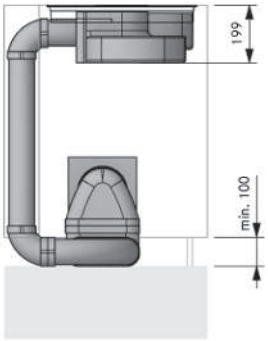

Planning information
① At least 50 mm to the start of the cut-out. This is a recommended measurement. Please contact your worktop manufacturer for the definitive dimension.
② Space required for technical equipment
③ Core bore hole at least Ø180 mm. Must expel air in a straight line regardless of the weather conditions.

BORA products
- 1x PUXA2/PUXA2R/PUXAM/ PUXAMR cooktop with integrated cooktop extractor – exhaust air

BORA Ecotube products
- 1x EFBH90/1 shallow horizontal 90° bend
- 3x EFBV90/1 shallow vertical 90° bend
- 1x EFR90/1 shallow-to-round 90° transition piece
- 1x EFV/1 shallow duct connection
- 1x ERV/1 round duct connection
- 1x UEBR/1 round 3box wall sleeve
- 3x EFS750/1 shallow duct with partition 750 mm
- 1x ER750/1 round duct 750 mm

Sealing material is included in the scope of delivery in the case of moulded parts with a socket design.

Exhaust air version
PA30410 fitted in the floor to the left with UEBF

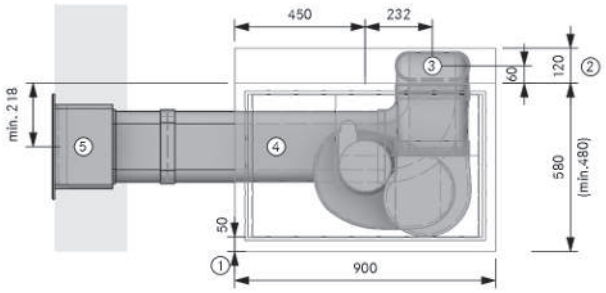

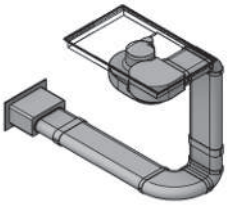

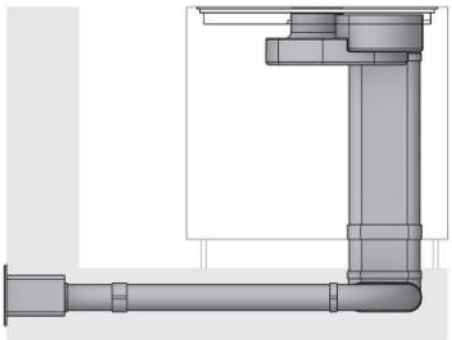

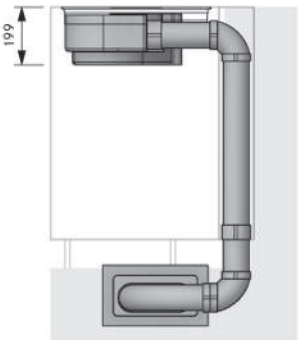

Planning information
① At least 50 mm to the start of the cut-out. This is a recommended measurement. Please contact your worktop manufacturer for the definitive dimension.
② Space required for technical equipment
③ Ecotube connection point
④ Fitted in the floor structure according to DIN 18560-2 (fully integrated in the levelling layer). If the structure deviates from this, reinforced screed must be provided for
⑤ Wall opening 310 x 155 mm. Must expel air in a straight line regardless of the weather conditions

BORA products
- 1x PUXA2/PUXA2R/PUXAM/ PUXAMR cooktop with integrated cooktop extractor – exhaust air

BORA Ecotube products
- 1x EFBH90/1 shallow horizontal 90° bend
- 2x EFBV90/1 shallow vertical 90° bend
- 3x EFV/1 shallow duct connection
- 1x UEBF/1 3box wall sleeve
- 3x EFS750/1 shallow duct with partition 750 mm

Sealing material is included in the scope of delivery in the case of moulded parts with a socket design.

Installation may only be carried out in accordance with the applicable standards, regulations and laws. See more model plans at **partner.bora.com**

Exhaust air version
PA40220 fitted in the basement to the right with UEBR

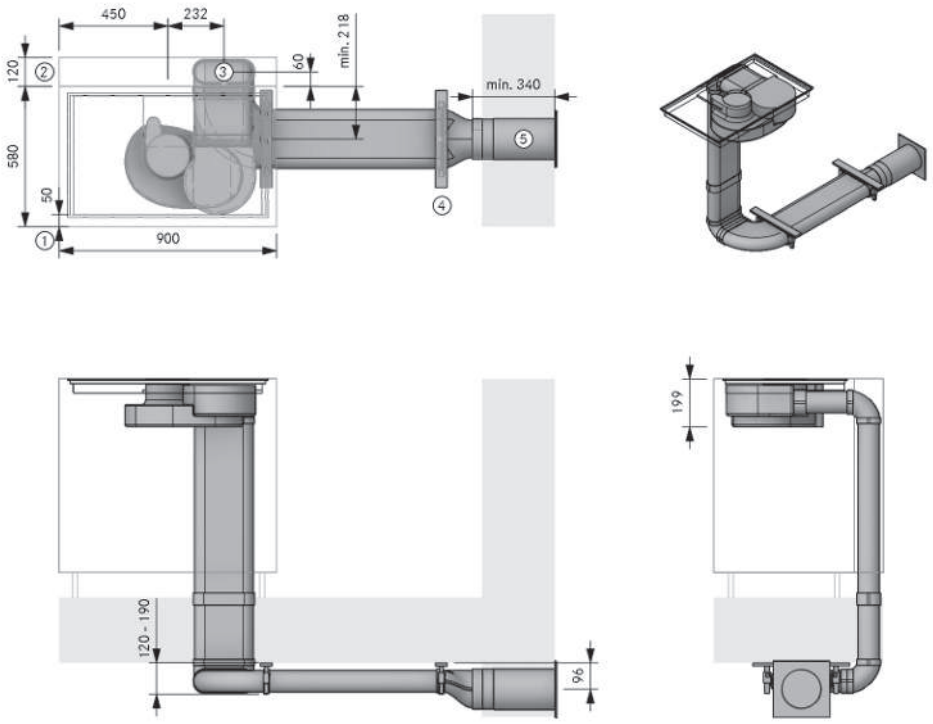

Planning information

① At least 50 mm to the start of the cut-out. This is a recommended measurement. Please contact your worktop manufacturer for the definitive dimension.
② Space required for technical equipment
③ Opening at least 110 x 270 mm
④ One mounting bracket set per Ecotube product with moulded coupling.
⑤ Core bore hole at least Ø180 mm. Must expel air in a straight line regardless of the weather conditions

BORA products

- 1x PUXA2/PUXA2R/PUXAM/ PUXAMR cooktop with integrated cooktop extractor – exhaust air

BORA Ecotube products

- 1x EFBH90/1 shallow horizontal 90° bend
- 2x EFBV90/1 shallow vertical 90° bend
- 1x EFRG/1 shallow-to-round straight transition piece
- 2x EFV/1 shallow duct connection
- 1x UEBR/1 round 3box wall sleeve
- 3x EFS750/1 shallow duct with partition 750 mm
- 1x ER750/1 round duct 750 mm
- 2x EFMS/1 shallow installation set

Sealing material is included in the scope of delivery in the case of moulded parts with a socket design.

Recirculation version

PU10000 recirculation

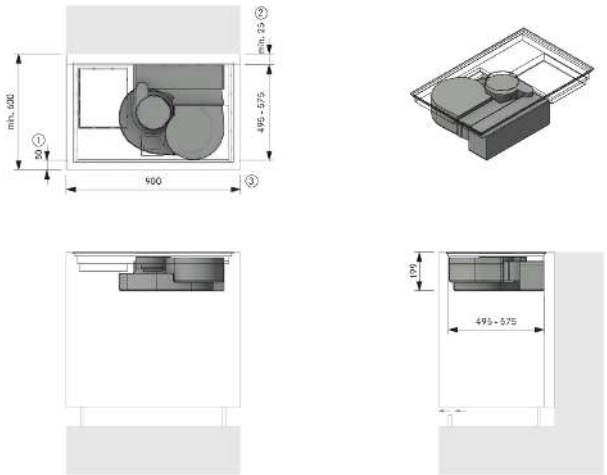

Planning information

① At least 50 mm to the start of the cut-out. This is a recommended measurement. For the binding measurement, please contact your worktop manufacturer.
② At least 25 mm must be provided between the back panel of the unit and the adjacent element
③ Unobstructed return flow aperture of at least 500 cm^2

BORA products

- 1x PUXA2/PUXA2R/PUXAM/ PUXAMR induction cooktop with integrated cooktop extractor – recirculation

X Pure Max en

D

BORA Lüftungstechnik GmbH
Rosenheimer Str. 33
83064 Raubling, Germany
T +49 (0) 8035 / 9840-0
F +49 (0) 8035 / 9840-300
support@bora.com

A

BORA Vertriebs GmbH & Co KG
Innstraße 1
6342 Niederndorf, Austria
T +43 (0) 5373 / 62250-0
F +43 (0) 5373 / 62250-90
support@bora.com

INT

BORA Holding GmbH
Innstraße 1
6342 Niederndorf, Austria
T +43 (0) 5373 / 62250-0
F +43 (0) 5373 / 62250-90
support@bora.com

Valid from 01.01.2027. Errors and technical changes reserved. Due to ongoing improvements thanks to research and development, BORA reserve the right to change product specifications or features without prior notice. BORA shall not be held liable for printing errors. The publication of images and graphics requires written consent.

bora.com